This sheet is developed to find the design equations for an uneven splitter similar to that proposed by Adams. I want to have a separate DOF to allow the attenuation to Port 2 (α) to be independent from attenuation to Port 3 (β). I think that adding R_w as below will do the trick by making Port 3 match independent from α.

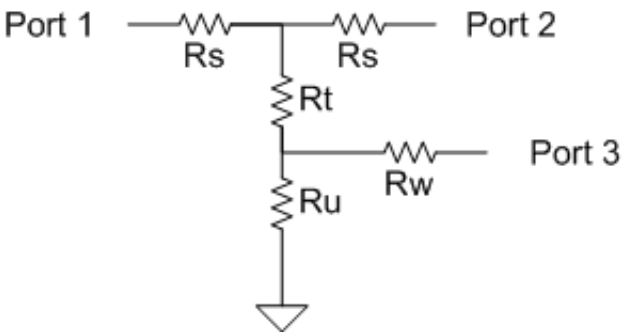

This circuit has four equations, one for match at Ports 1 and 2 (they are Symmetrical), one for match at Port 3, one for α, and one for β.

The Port 1 Match condition:

$$Z_0 = R_s + \frac{1}{\frac{1}{R_s + Z_0} + \frac{1}{R_p}}$$

$$Z_0 = R_s + \frac{1}{\frac{1}{R_s + Z_0} + \frac{1}{R_p}} \qquad \textbf{(1)}$$

Where R_p is a convenient notation for the impedance seen "looking down" into R_t from the node between R_s and R_w.

$$R_p = R_t + \frac{1}{\frac{1}{R_w + Z_0} + \frac{1}{R_u}}$$

$$R_p = R_t + \frac{1}{\frac{1}{R_u} + \frac{1}{R_w + Z_0}} \qquad \textbf{(2)}$$

The equation for α is derived by looking at voltage dividers. Subscripts on Voltage indicate port number, with V_p meaning the voltage at the node in the middle of the top branch.

$$V_p = \frac{\left(\frac{1}{\frac{1}{R_p} + \frac{1}{R_s + Z_0}}\right) \cdot V_1}{R_s + \frac{1}{\frac{1}{R_p} + \frac{1}{R_s + Z_0}}}$$

$$V_p = \frac{V_1}{\left(\frac{1}{R_s + Z_0} + \frac{1}{R_p}\right)\left(R_s + \frac{1}{\frac{1}{R_s + Z_0} + \frac{1}{R_p}}\right)} \tag{3}$$

$$V_2 = \frac{Z_0 \cdot V_p}{R_s + Z_0}$$

$$V_2 = \frac{Z_0\, V_p}{R_s + Z_0} \tag{4}$$

subs(**(3)**, **(4)**)

$$V_2 = \frac{Z_0\, V_1}{\left(\frac{1}{R_s + Z_0} + \frac{1}{R_p}\right)\left(R_s + \frac{1}{\frac{1}{R_s + Z_0} + \frac{1}{R_p}}\right)(R_s + Z_0)} \tag{5}$$

$$\frac{\textbf{(5)}}{V_1}$$

$$\frac{V_2}{V_1} = \frac{Z_0}{\left(\frac{1}{R_s + Z_0} + \frac{1}{R_p}\right)\left(R_s + \frac{1}{\frac{1}{R_s + Z_0} + \frac{1}{R_p}}\right)(R_s + Z_0)} \tag{6}$$

simplify(**(6)**)

$$\frac{V_2}{V_1} = \frac{R_p\, Z_0}{2\, R_s\, R_p + R_s^2 + R_s\, Z_0 + R_p\, Z_0} \tag{7}$$

$$\frac{V_2}{V_1} = \alpha$$

$$\frac{V_2}{V_1} = \alpha \tag{8}$$

subs(**(8)**, **(7)**)

$$\alpha = \frac{R_p\, Z_0}{2\, R_s\, R_p + R_s^2 + R_s\, Z_0 + R_p\, Z_0} \tag{9}$$

Let's plug in the match condition from **(1)**

isolate(**(1)**, R_p)

$$R_p = -\frac{1}{2}\,\frac{-Z_0^2 + R_s^2}{R_s} \tag{10}$$

subs(**(10)**, **(9)**)

$$\alpha = -\frac{1}{2}\,\frac{\left(-Z_0^2 + R_s^2\right) Z_0}{R_s\left(Z_0^2 + R_s Z_0 - \frac{1}{2}\,\frac{\left(-Z_0^2 + R_s^2\right) Z_0}{R_s}\right)} \tag{11}$$

isolate(**(11)**, R_s)

$$R_s = -\frac{Z_0\,(-1 + \alpha)}{1 + \alpha} \tag{12}$$

So, same as Adams, first step is to choose α and find out what R_s is going to be.

with(*plots*, *implicitplot*) : *implicitplot*(*subs*($Z_0 = 50$, **(12)**), $\alpha = 0..1$, $R_s = 0..100$)

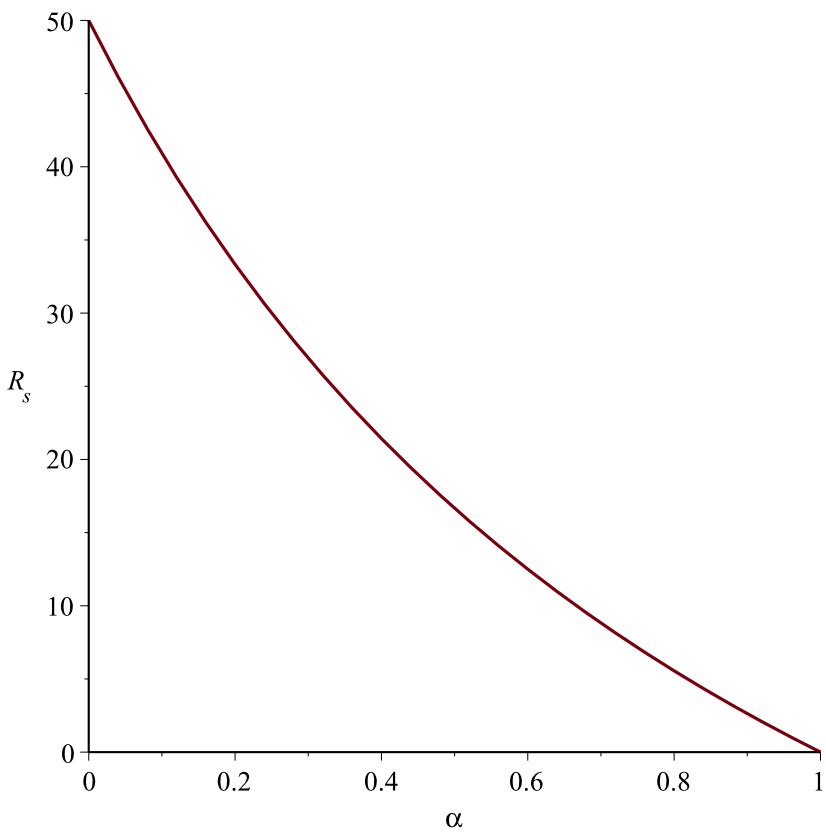

This looks like any value of α is feasible. Let's see what happens to P.

subs(**(12)**, **(10)**)

$$R_p = \frac{1}{2} \frac{\left(-Z_0^2 + \frac{Z_0^2 (-1+\alpha)^2}{(1+\alpha)^2}\right)(1+\alpha)}{Z_0 (-1+\alpha)} \tag{13}$$

simplify(**(13)**)

$$R_p = -\frac{2 Z_0 \alpha}{-1+\alpha^2} \tag{14}$$

implicitplot$\left(subs\left(Z_0 = 50, \textbf{(14)}\right), \alpha = 0..1, R_p = 0..1000\right)$

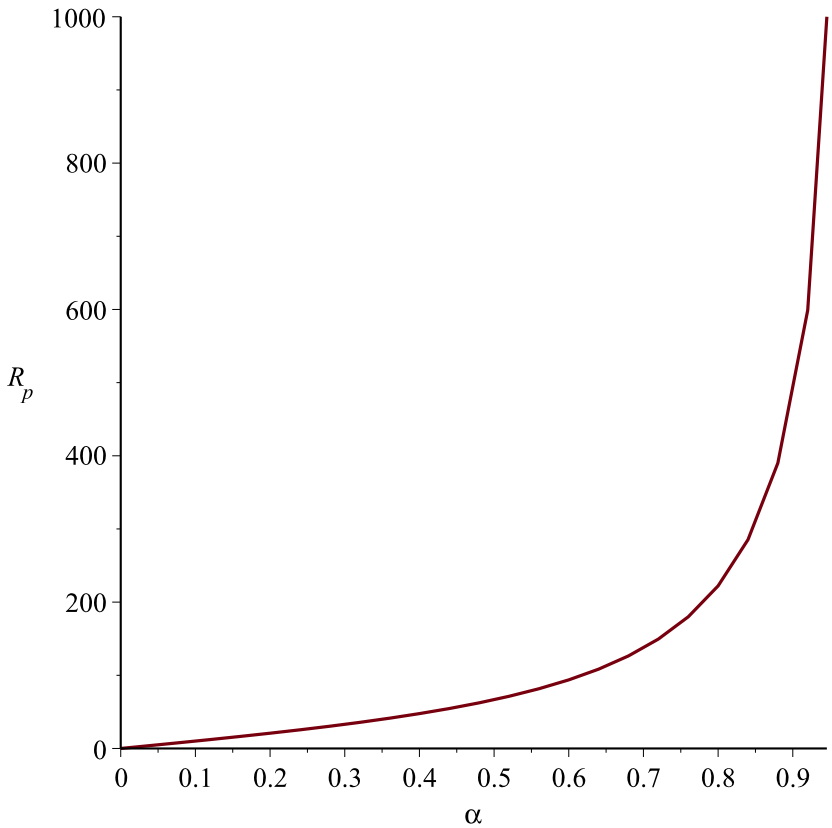

I'm going to have to go back and look at this again after working on the Port 3 conditions....

The Port 3 match condition is:

$$Z_0 = R_w + \frac{1}{\frac{1}{R_u} + \frac{1}{R_t + \frac{(R_s + Z_0)}{2}}}$$

$$Z_0 = R_w + \frac{1}{\frac{1}{R_u} + \frac{1}{R_t + \frac{1}{2} R_s + \frac{1}{2} Z_0}} \tag{15}$$

Finding the formula for Port 3 attenuation β:

First to the node in the middle of the top branch,

(3)

$$V_p = \frac{V_1}{\left(\frac{1}{R_s + Z_0} + \frac{1}{R_p}\right)\left(R_s + \frac{1}{\frac{1}{R_s + Z_0} + \frac{1}{R_p}}\right)} \tag{16}$$

Call V_v the voltage at the node on the other side of R_t.

$$V_v = \frac{V_p}{R_p}\left(\frac{1}{\frac{1}{R_u} + \frac{1}{R_w + Z_0}}\right)$$

$$V_v = \frac{V_p}{R_p\left(\frac{1}{R_u} + \frac{1}{R_w + Z_0}\right)} \tag{17}$$

$$V_3 = \frac{V_v}{R_w + Z_0} \cdot Z_0$$

$$V_3 = \frac{V_v Z_0}{R_w + Z_0} \tag{18}$$

subs(**(17)**, **(18)**)

$$V_3 = \frac{V_p Z_0}{R_p\left(\frac{1}{R_u} + \frac{1}{R_w + Z_0}\right)(R_w + Z_0)} \tag{19}$$

subs(**(16)**, **(19)**)

$$V_3 = \frac{V_1 Z_0}{\left(\frac{1}{R_s + Z_0} + \frac{1}{R_p}\right)\left(R_s + \frac{1}{\frac{1}{R_s + Z_0} + \frac{1}{R_p}}\right) R_p\left(\frac{1}{R_u} + \frac{1}{R_w + Z_0}\right)(R_w + Z_0)} \tag{20}$$

simplify(**(20)**)

$$V_3 = \frac{(R_s + Z_0)\, V_1 R_u Z_0}{(R_w + Z_0 + R_u)\left(2 R_s R_p + R_s^2 + R_s Z_0 + R_p Z_0\right)} \tag{21}$$

$$subs\left(\frac{V_3}{V_1} = \beta,\ \frac{\mathbf{(21)}}{V_1}\right)$$

$$\beta = \frac{(R_s + Z_0)\, R_u\, Z_0}{(R_w + Z_0 + R_u)\,\left(2\, R_s\, R_p + R_s^2 + R_s\, Z_0 + R_p\, Z_0\right)} \tag{22}$$

Now plug in match condition into the β definition, first expressing R_w in terms of R_p, R_t, and R_u

isolate(**(2)**, R_w)

$$R_w = \frac{1}{\frac{1}{R_p - R_t} - \frac{1}{R_u}} - Z_0 \tag{23}$$

subs(**(23)**, **(22)**)

$$\beta = \frac{(R_s + Z_0)\, R_u\, Z_0}{\left(\frac{1}{\frac{1}{R_p - R_t} - \frac{1}{R_u}} + R_u\right)\left(2\, R_s\, R_p + R_s^2 + R_s\, Z_0 + R_p\, Z_0\right)} \tag{24}$$

simplify(**(24)**)

$$\beta = -\frac{(R_s + Z_0)\, Z_0\, (-R_u + R_p - R_t)}{R_u\left(2\, R_s\, R_p + R_s^2 + R_s\, Z_0 + R_p\, Z_0\right)} \tag{25}$$

subs(**(23)**, **(15)**)

$$Z_0 = \frac{1}{\frac{1}{R_p - R_t} - \frac{1}{R_u}} - Z_0 + \frac{1}{\frac{1}{R_u} + \frac{1}{R_t + \frac{1}{2}\, R_s + \frac{1}{2}\, Z_0}} \tag{26}$$

simplify(**(26)**)

$$Z_0 = -\frac{1}{(-R_u + R_p - R_t)\,(2\, R_t + R_s + Z_0 + 2\, R_u)}\left(2\, R_u\, R_p\, Z_0 - 4\, R_u\, Z_0\, R_t - Z_0\, R_u\, R_s + 2\, Z_0\, R_p\, R_t + Z_0\, R_s\, R_p - Z_0\, R_t\, R_s + 2\, R_p\, R_u^2 - R_u\, Z_0^2 - Z_0\, R_u^2 + R_p\, Z_0^2 - 2\, Z_0\, R_t^2 - Z_0^2\, R_t + R_u^2\, R_s\right) \tag{27}$$

isolate(**(27)**, R_t)

$$R_t = \frac{1}{4}\,\frac{1}{Z_0}\left(-4\, R_u\, Z_0 + 2\, R_p\, Z_0 - R_s\, Z_0 - Z_0^2 + \sqrt{4\, R_u^2\, Z_0^2 + 4\, R_p^2\, Z_0^2 + 4\, R_p\, Z_0^2\, R_s + 4\, R_p\, Z_0^3 + R_s^2\, Z_0^2 + 2\, Z_0^3\, R_s + Z_0^4 + 8\, Z_0\, R_p\, R_u^2 + 4\, Z_0\, R_u^2\, R_s}\right) \tag{28}$$

subs(**(28)**, **(25)**)

$$\beta = -\frac{1}{R_u\left(2\, R_s\, R_p + R_s^2 + R_s\, Z_0 + R_p\, Z_0\right)}\left((R_s + Z_0)\, Z_0\left(-R_u + R_p - \frac{1}{4}\,\frac{1}{Z_0}\left(-4\, R_u\, Z_0 + 2\, R_p\, Z_0 - R_s\, Z_0 - Z_0^2 + \sqrt{4\, R_u^2\, Z_0^2 + 4\, R_p^2\, Z_0^2 + 4\, R_p\, Z_0^2\, R_s + 4\, R_p\, Z_0^3 + R_s^2\, Z_0^2 + 2\, Z_0^3\, R_s + Z_0^4 + 8\, Z_0\, R_p\, R_u^2 + 4\, Z_0\, R_u^2\, R_s}\right)\right.\right. \tag{29}$$

$$))$$

isolate(**(29)**, R_u)

$$R_u = -\left(2 Z_0 \beta \left(2 R_p^2 Z_0^2 + R_s^4 + 3 R_s^3 Z_0 + 3 R_s^2 Z_0^2 + Z_0^3 R_s + R_p Z_0^3 + 4 R_p^2 R_s^2 + 4 R_p R_s^3 + 9 Z_0 R_s^2 R_p + 6 Z_0 R_s R_p^2 + 6 R_p Z_0^2 R_s\right)\right) \Big/ \left(4 \beta^2 R_s^4 - 3 R_s^2 Z_0^2 - 3 Z_0^3 R_s - 2 R_p Z_0^3 - R_s^3 Z_0 - Z_0^4 + 16 \beta^2 R_s^2 R_p^2 + 16 \beta^2 R_s^3 R_p + 8 \beta^2 R_s^3 Z_0 + 4 \beta^2 R_s^2 Z_0^2 + 4 \beta^2 R_p^2 Z_0^2 - 2 Z_0 R_s^2 R_p - 4 R_p Z_0^2 R_s + 24 \beta^2 R_s^2 R_p Z_0 + 16 \beta^2 R_s R_p^2 Z_0 + 8 \beta^2 R_s Z_0^2 R_p\right) \tag{30}$$

simplify(**(30)**)

$$R_u = -\left(2 Z_0 \beta \left(2 R_p^2 Z_0^2 + R_s^4 + 3 R_s^3 Z_0 + 3 R_s^2 Z_0^2 + Z_0^3 R_s + R_p Z_0^3 + 4 R_p^2 R_s^2 + 4 R_p R_s^3 + 9 Z_0 R_s^2 R_p + 6 Z_0 R_s R_p^2 + 6 R_p Z_0^2 R_s\right)\right) \Big/ \left(4 \beta^2 R_s^4 - 3 R_s^2 Z_0^2 - 3 Z_0^3 R_s - 2 R_p Z_0^3 - R_s^3 Z_0 - Z_0^4 + 16 \beta^2 R_s^2 R_p^2 + 16 \beta^2 R_s^3 R_p + 8 \beta^2 R_s^3 Z_0 + 4 \beta^2 R_s^2 Z_0^2 + 4 \beta^2 R_p^2 Z_0^2 - 2 Z_0 R_s^2 R_p - 4 R_p Z_0^2 R_s + 24 \beta^2 R_s^2 R_p Z_0 + 16 \beta^2 R_s R_p^2 Z_0 + 8 \beta^2 R_s Z_0^2 R_p\right) \tag{31}$$

subs(**(12)**, **(14)**, **(31)**)

$$R_u = -\left(2 Z_0 \beta \left(\frac{8 Z_0^4 \alpha^2}{\left(-1+\alpha^2\right)^2} + \frac{Z_0^4 (-1+\alpha)^4}{(1+\alpha)^4} - \frac{3 Z_0^4 (-1+\alpha)^3}{(1+\alpha)^3} + \frac{3 Z_0^4 (-1+\alpha)^2}{(1+\alpha)^2} - \frac{Z_0^4 (-1+\alpha)}{1+\alpha} - \frac{2 Z_0^4 \alpha}{-1+\alpha^2} + \frac{16 Z_0^4 \alpha^2 (-1+\alpha)^2}{\left(-1+\alpha^2\right)^2 (1+\alpha)^2} + \frac{8 Z_0^4 \alpha (-1+\alpha)^3}{\left(-1+\alpha^2\right)(1+\alpha)^3} - \frac{18 Z_0^4 (-1+\alpha)^2 \alpha}{(1+\alpha)^2 \left(-1+\alpha^2\right)} - \frac{24 Z_0^4 (-1+\alpha) \alpha^2}{(1+\alpha)\left(-1+\alpha^2\right)^2} + \frac{12 Z_0^4 \alpha (-1+\alpha)}{\left(-1+\alpha^2\right)(1+\alpha)}\right)\right) \Bigg/ \left(\frac{4 \beta^2 Z_0^4 (-1+\alpha)^4}{(1+\alpha)^4} - \frac{3 Z_0^4 (-1+\alpha)^2}{(1+\alpha)^2} + \frac{3 Z_0^4 (-1+\alpha)}{1+\alpha} + \frac{4 Z_0^4 \alpha}{-1+\alpha^2} + \frac{Z_0^4 (-1+\alpha)^3}{(1+\alpha)^3} - Z_0^4 + \frac{64 \beta^2 Z_0^4 (-1+\alpha)^2 \alpha^2}{(1+\alpha)^2 \left(-1+\alpha^2\right)^2} + \frac{32 \beta^2 Z_0^4 (-1+\alpha)^3 \alpha}{(1+\alpha)^3 \left(-1+\alpha^2\right)} - \frac{8 \beta^2 Z_0^4 (-1+\alpha)^3}{(1+\alpha)^3} + \frac{4 \beta^2 Z_0^4 (-1+\alpha)^2}{(1+\alpha)^2} + \frac{16 \beta^2 Z_0^4 \alpha^2}{\left(-1+\alpha^2\right)^2} + \frac{4 Z_0^4 (-1+\alpha)^2 \alpha}{(1+\alpha)^2 \left(-1+\alpha^2\right)} - \frac{8 Z_0^4 \alpha (-1+\alpha)}{\left(-1+\alpha^2\right)(1+\alpha)} - \frac{48 \beta^2 Z_0^4 (-1+\alpha)^2 \alpha}{(1+\alpha)^2 \left(-1+\alpha^2\right)} - \frac{64 \beta^2 Z_0^4 (-1+\alpha) \alpha^2}{(1+\alpha)\left(-1+\alpha^2\right)^2} + \frac{16 \beta^2 Z_0^4 (-1+\alpha) \alpha}{(1+\alpha)\left(-1+\alpha^2\right)}\right) \tag{32}$$

simplify(**(32)**)

$$R_u = -\frac{2\,\beta\,Z_0}{\alpha - 1 + 2\,\beta^2} \tag{33}$$

subs(**(33)**, **(22)**)

$$\beta = -\frac{2\,(R_s + Z_0)\,\beta\,Z_0^2}{(\alpha - 1 + 2\,\beta^2)\left(R_w + Z_0 - \frac{2\,\beta\,Z_0}{\alpha - 1 + 2\,\beta^2}\right)(2\,R_s\,R_p + R_s^2 + R_s\,Z_0 + R_p\,Z_0)} \tag{34}$$

subs(**(12)**, **(14)**, **(34)**)

$$\beta = -\left(2\left(-\frac{Z_0\,(-1+\alpha)}{1+\alpha} + Z_0\right)\beta\,Z_0^2\right) \Big/ \left((\alpha - 1 + 2\,\beta^2)\left(R_w + Z_0 - \frac{2\,\beta\,Z_0}{\alpha - 1 + 2\,\beta^2}\right)\left(\frac{4\,Z_0^2\,(-1+\alpha)\,\alpha}{(1+\alpha)\,(-1+\alpha^2)} + \frac{Z_0^2\,(-1+\alpha)^2}{(1+\alpha)^2} - \frac{Z_0^2\,(-1+\alpha)}{1+\alpha} - \frac{2\,Z_0^2\,\alpha}{-1+\alpha^2}\right)\right) \tag{35}$$

simplify(**(35)**, *radical*)

$$\beta = \frac{2\,(-1+\alpha)\,\beta\,Z_0}{\alpha\,R_w + \alpha\,Z_0 - R_w - Z_0 + 2\,\beta^2\,R_w + 2\,\beta^2\,Z_0 - 2\,\beta\,Z_0} \tag{36}$$

isolate(**(36)**, R_w)

$$R_w = \frac{-(2 - 2\,\alpha)\,Z_0 - \alpha\,Z_0 + Z_0 - 2\,\beta^2\,Z_0 + 2\,\beta\,Z_0}{\alpha - 1 + 2\,\beta^2} \tag{37}$$

simplify(**(37)**)

$$R_w = \frac{Z_0\,(-1 + \alpha - 2\,\beta^2 + 2\,\beta)}{\alpha - 1 + 2\,\beta^2} \tag{38}$$

subs(**(33)**, **(38)**, **(2)**)

$$R_p = R_t + \frac{1}{-\frac{1}{2}\,\frac{\alpha - 1 + 2\,\beta^2}{\beta\,Z_0} + \frac{1}{\frac{Z_0\,(-1 + \alpha - 2\,\beta^2 + 2\,\beta)}{\alpha - 1 + 2\,\beta^2} + Z_0}} \tag{39}$$

subs(**(14)**, **(39)**)

$$-\frac{2\,Z_0\,\alpha}{-1+\alpha^2} = R_t + \frac{1}{-\frac{1}{2}\,\frac{\alpha - 1 + 2\,\beta^2}{\beta\,Z_0} + \frac{1}{\frac{Z_0\,(-1 + \alpha - 2\,\beta^2 + 2\,\beta)}{\alpha - 1 + 2\,\beta^2} + Z_0}} \tag{40}$$

isolate(**(40)**, R_t)

$$R_t = -\frac{2\,Z_0\,\alpha}{-1+\alpha^2} - \frac{1}{-\frac{1}{2}\,\frac{\alpha-1+2\,\beta^2}{\beta\,Z_0} + \frac{1}{\frac{Z_0\left(-1+\alpha-2\,\beta^2+2\,\beta\right)}{\alpha-1+2\,\beta^2}+Z_0}} \tag{41}$$

simplify(**(41)**)

$$R_t = \frac{2\,Z_0\left(-\alpha+\alpha\,\beta+\beta-\beta^2\right)}{\left(\alpha-1+2\,\beta^2\right)\left(1+\alpha\right)} \tag{42}$$

(12), (14)

$$R_s = -\frac{Z_0\left(-1+\alpha\right)}{1+\alpha},\ R_p = -\frac{2\,Z_0\,\alpha}{-1+\alpha^2} \tag{43}$$

(42), (33), (38)

$$R_t = \frac{2\,Z_0\left(-\alpha+\alpha\,\beta+\beta-\beta^2\right)}{\left(\alpha-1+2\,\beta^2\right)\left(1+\alpha\right)},\ R_u = -\frac{2\,\beta\,Z_0}{\alpha-1+2\,\beta^2},\ R_w = \frac{Z_0\left(-1+\alpha-2\,\beta^2+2\,\beta\right)}{\alpha-1+2\,\beta^2} \tag{44}$$